Recessed LED Panel (Grill)

For office space and general indoors lighting



Built to replace conventional fluorescent panels with shutters, with even better results. Through milky diffuser glare is eliminated and high efficacy due to high quality LEDs and direct radiation is a foretold result.

40W 140Lm/W 6000°K IP20

Physical	
Mass	3.2kg
Dimensions	D 595 * L 595mm (Luminous area = 3*540*110mm) * T 41mm
Body	Electrostatically coated press formed sheet steel
Diffuser	PET - Milky
Protection	IP20
Mounting	False ceiling recessed (Adapter for concrete ceiling available)
Photometric	
Light Source	SMD LEDs
Efficacy	140 Lm/W
LOR	0.7475
Spread angle	109.4°
Spectrometric	
CCT	6584°K
CRI	83
Electrical	
Power supply	220VAC, 50Hz
Power	40W
Current	0.185 A (RMS)
Power Factor	0.972
THDI	7%

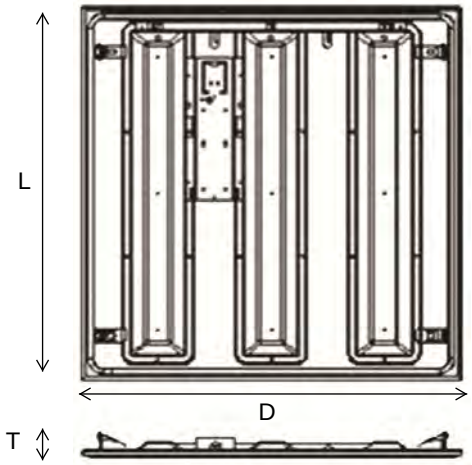

Polar radiation distribution

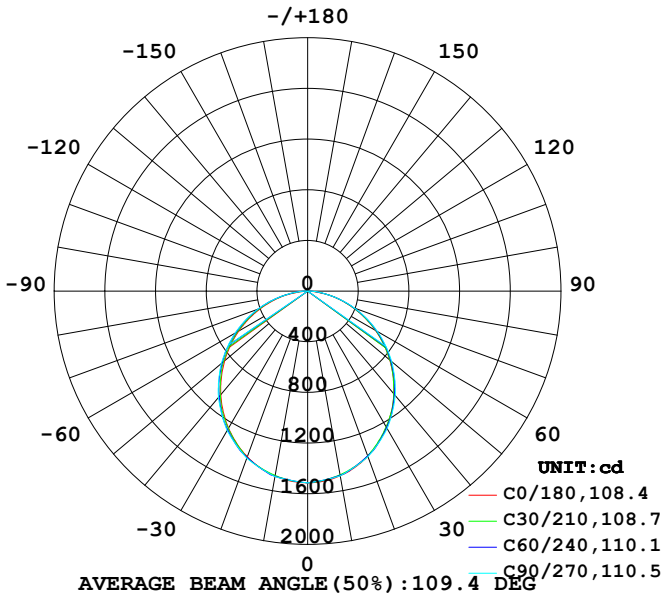

Horizontal illuminance

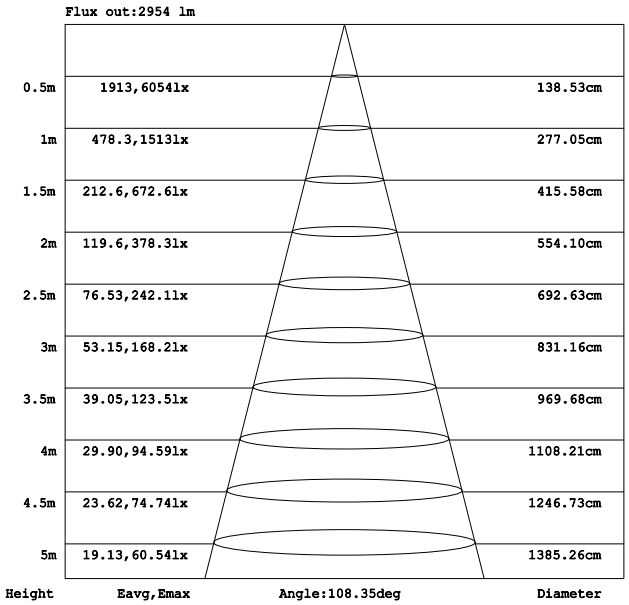

Electrical oscilloscopy

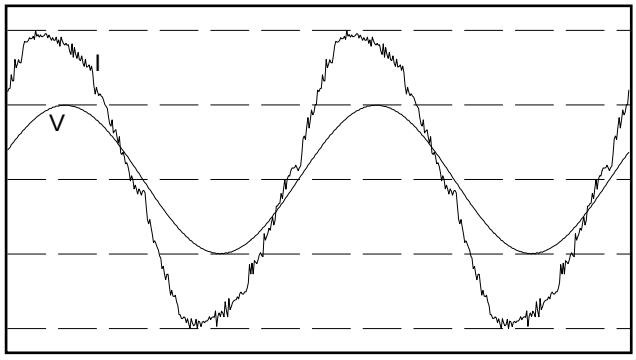

Color spectrum

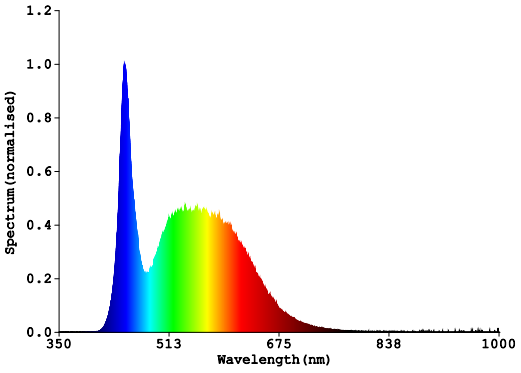

Art. no.	Type	Power	CCT
GRILL-SMD040260--	LED Panel Grill (recessed)*	40W	6000°K

* Adapter for concrete ceiling also available (electrostatically coated sheet steel)

Sources for software simulation for installation (*.IES, *.LDT files) and advanced test results are available on request
Performance described above requires proper installation according to internationally recognized codes and within mentioned operational limitations.
Any properties not directly affecting photometric, spectrometric or electrical performance are liable to change without prior notice.

SEGA.M ELECTRICAL PRODUCTS
Sega-M Electrical Products
Industrial Division: Industrial Area A3, 10th of Ramadan City, Tel.: (+2)0554332072 - 0554332080, Fax: (+2)0554332067, cus.service@sega-m.com, sega-m@sega-m.com
Commercial Division (Main): 87 Abou-Bakr Al-Seddik St., Safir Square, Heliopolis, Cairo, Tel.: (+202)24183122 – 24183144, Fax: (+202) 24185022, sales@Sega-m.com
Commercial Division (Lighting): Milsa apartment building no.6 , Nasr City, Cairo. Tel.: (+202)24181878, sales.lighting@sega-m.com
www.sega-m.com
SEGA.M LIGHTING SOLUTIONS