Recessed LED Down light (Lens based)

For office space and general indoors lighting



Highly efficient replacement to conventional down lights, saving both power and space. Miniature size and clamp fixation allows easy installation and maintenance even with confined space above false ceiling.

4/12W 140Lm/W 3000-6000°K IP20 (IP54 front)

Physical	
Mass	Size1: 0.195kg, Size2: 0.48kg
Dimensions	Size1: φr 97mm, φhole 80mm * h 42mm (Up to 4W), Size2: φr 144mm, φhole 126mm * h 65 mm (Up to 12W)
Body	Electrostatically coated die cast aluminum ring + Anodized aluminum section heat sink
Emitting surface	PMMA Lenses
Protection	IP20 (IP54 Front)
Mounting	False ceiling recessed, spring-loaded clamp
Photometric	
Light Source	SMD LEDs
Efficacy	140 Lm/W
LOR	0.714
Spread angle	40.5° (Size1) / 35.3° (Size2)
Spectrometric	
CCT	3000-6000°K
CRI	73.7
Electrical	
Power supply	220VAC, 50Hz
Power	4/12W
Current	0.041-0.056 A (RMS)
Power Factor	0.97
THDI	8.6%

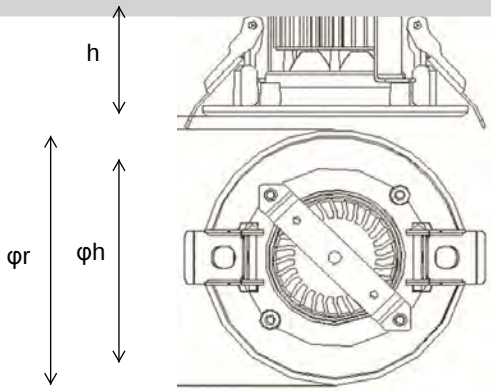

Polar radiation distribution

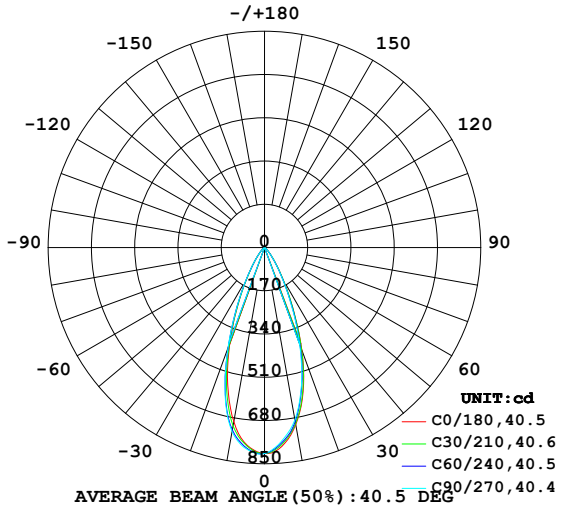

Size1: 4W

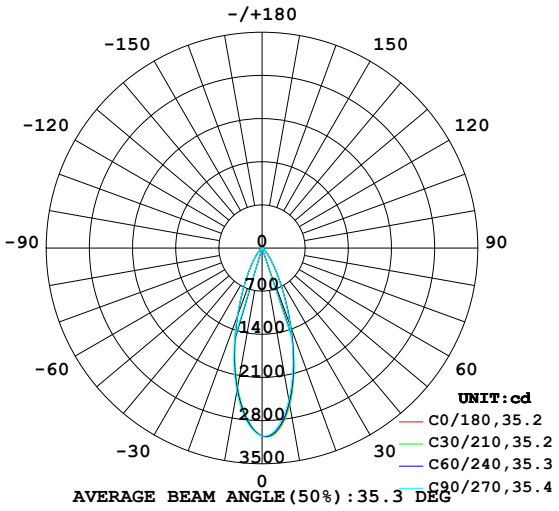

Size1: 12W

Electrical oscilloscopy

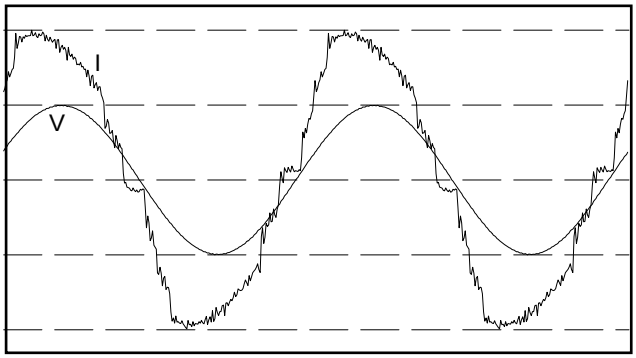

Art. no.	Type	Power	CCT
SLMD10-SMD004230--	LED Down light SMD (size1)	4W	3000°K
SLMD10-SMD004240--	LED Down light SMD (size1)	4W	4000°K
SLMD10-SMD004260--	LED Down light SMD (size1)	4W	6000°K
SLMD15-SMD012230--	LED Down light SMD (size2)	12W	3000°K
SLMD15-SMD012240--	LED Down light SMD (size2)	12W	4000°K
SLMD15-SMD012260--	LED Down light SMD (size2)	12W	6000°K

Sources for software simulation for installation (*.IES, *.LDT files) and advanced test results are available on request
Performance described above requires proper installation according to internationally recognized codes and within mentioned operational limitations.
Any properties not directly affecting photometric, spectrometric or electrical performance are liable to change without prior notice.

SEGA.M ELECTRICAL PRODUCTS
Sega-M Electrical Products
Industrial Division: Industrial Area A3, 10th of Ramadan City, Tel.: (+2)0554332072 - 0554332080, Fax: (+2)0554332067, cus.service@sega-m.com, sega-m@sega-m.com
Commercial Division (Main): 87 Abou-Bakr Al-Seddik St., Safir Square, Heliopolis, Cairo, Tel.: (+202)24183122 – 24183144, Fax: (+202) 24185022, sales@Sega-m.com
Commercial Division (Lighting): Milsa apartment building no.6 , Nasr City, Cairo. Tel.: (+202)24181878, sales.lighting@sega-m.com
www.sega-m.com
SEGA.M LIGHTING SOLUTIONS